Wiring Diagram Maxi 600B 120V NO LED Rev 0: 18-03-2010

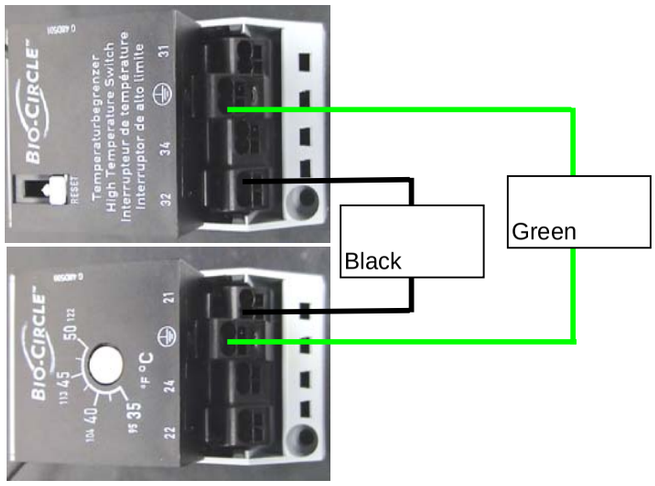

		A Ground	B Hot	Bridge	C Neutral	Bridge		D Neutral	E Hot	
Heater	7	Green	Black		White				Grey to 22 of thermostat	7
Cleaning Pump	6	Green	Brown		Blue			Black to A2 of timer	Black to 15 of timer	6
Air pump	5		Black with stripes		Black			White to T1 terminal of I/0 switch	Black to N of I/0 switch	5
Pump Switch	4		Black		White			Black to Y1 of timer	Black to 18 of timer	4
Float Switch	3	Green	Black		White					3
	2	Green to Thermostat ground			Black to timer A1			Black to 31 of HLS		2
Power Cord	1	Green	Black		White			Black terminal N of I/0 switch	White to L1 of I/0 switch	1
		A	B		C			D	E	

Y1	**TIMER**			**A2**
15				
A1				**18**